Telegärtner
KARL GÄRTNER GMBH

order number: J01150A0081

SMA Angle Plug Crimp G5 (RG-223/U); RG-142B/U

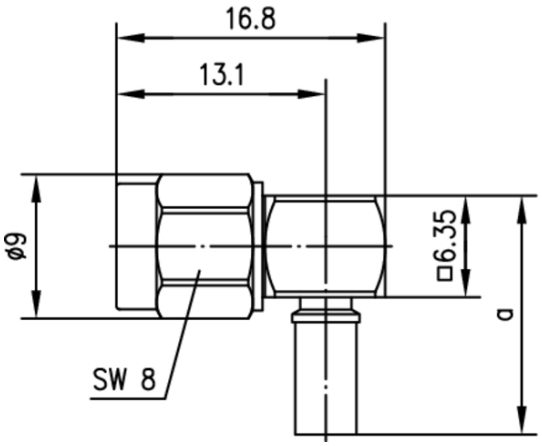

Technical Attributes	
Cable group; cable	G5 (RG-223/U); RG-142B/U; 1.0/2.95 AF RG-142B/U RG-400/U RG-223/U
Remarks	>39 dB/1 GHz; >35 dB/2 GHz; >28 dB/4 GHz
Finish	Gold
Dimensions	a=21.4
Assembly	C0405
Crimp die	N01003A0005
Series	
Mount. dim.	

Product description

The SMA series is a very popular coax connector with threaded coupling, and can be used up to frequencies of over 18 GHz (depending on type). The impedance is controlled at 50 Ω. Connector styles are available for flexible, conformable and semi-rigid cable types. Versions of the SMA connector are available for mounting to printed circuit boards using both through-hole soldered and through-hole press-fit techniques, as well as surface mount types (SMD). Solder, crimp and clamp techniques are used to terminate this series to cables. SMA applications include communications, satellite and test equipment.

© 2016 Telegärtner Karl Gärtner GmbH. Technische Änderungen vorbehalten. Technical changes reserved. www.telegaertner.com
Lerchenstr. 35, D-71144 Steinenbronn, Tel. +49 (0) 7157 125 100, Fax +49 (0) 7157 125 120, E-Mail: info@telegaertner.com

Telegärtner
KARL GÄRTNER GMBH

Mating face sealing for SMA connectors between plug and jack (mated) according to IP 68. This classification is a general statement for the relevant series. Individual connectors may deviate from the values shown. If in doubt, please consult our engineers.

Mechanical Characteristics	
Durability (mating cycles)	≥ 500
Recommended coupling torque	79 - 113 Ncm
Material: spring contacts	CuBe2
Material: solid contact parts standard type	CuZn39Pb3
Material: solid contact parts MIL-type (stainless steel)	1.4305
Material: crimp ferrule	Cu
Material: serrated lock washer	CuSn6
Material: insulators	PTFE PTFE
Material: gaskets	MVQ
Finish: Inner conductor	Cu1Ni2Au1.27
Finish outer conductor: Gold (standard; last digit ...1)	NiPAu
Finish outer conductor: MIL gold (last digit ...2)	Cu1Ni2Au1.27
Finish outer conductor: Stainless steel (last digit ...6)	passivated passivated
Finish outer conductor: Type for printed circuits (last digit ...7)	SnPb8
Finish outer conductor: Telealloy (white bronze) (last digit ...8)	CuSnZn3 (Telealloy); Ag2CuSnZn0.5 (Optargen)
Finish outer conductor: Nickel (last digit ...9)	Cu2Ni5
Finish other metal parts: Gold (standard; last digit ...1)	Cu2Ni5Au0.2
Finish other metal parts: MIL gold (last digit ...2)	Cu1Ni2Au0.8
Finish other metal parts: Stainless steel (MIL type; last digit ...6)	passivated passivated
Finish other metal parts: Telealloy (white bronze) (last digit...8)	CuSnZn3

© 2016 Telegärtner Karl Gärtner GmbH. Technische Änderungen vorbehalten. Technical changes reserved. www.telegaertner.com
Lerchenstr. 35, D-71144 Steinenbronn, Tel. +49 (0) 7157 125 100, Fax +49 (0) 7157 125 120, E-Mail: info@telegaertner.com

Finish other metal parts: Nickel (last digit ...9)	Cu2Ni5

Climatic Characteristics	
Climatic category acc. to IEC 60068 - 1	55/155/56

Electrical Characteristics	
Impedance	50 Ω
Voltage proof	1 kV/50 Hz
Working voltage	≤ 335 V/50 Hz
Contact resistance inner conductor	≤ 3 mΩ
Contact resistance outer conductor	≤ 2 mΩ
Insulation resistance	≥ 5 GΩ
Frequency range for flexible cable up to	12.4 GHz
Frequency range for semi-rigid cable up to (Straight style)	18.0 GHz
Frequency range for semi-rigid cable up to (Angle style)	12.4 GHz
Return loss flexible cable (straight and angle style) at 1 GHz	≥ 20.0 dB
Return loss flexible cable (straight and angle style) at 2 GHz	≥ 19.2 dB
Return loss flexible cable (straight and angle style) at 4 GHz	≥ 17.7 dB
Return loss flexible cable (straight and angle style) at 6 GHz	≥ 16.5 dB
Return loss semi-rigid cable (straight style) at 1 GHz	≥ 28.5 dB
Return loss semi-rigid cable (straight style) at 2 GHz	≥ 27.5 dB
Return loss semi-rigid cable (straight style) at 4 GHz	≥ 26.0 dB
Return loss semi-rigid cable (straight style) at 6 GHz	≥ 24.9 dB
Return loss semi-rigid cable (angle style) at	≥ 25.7 dB

© 2016 Telegärtner Karl Gärtner GmbH. Technische Änderungen vorbehalten. Technical changes reserved. www.telegaertner.com
Lerchenstr. 35, D-71144 Steinenbronn, Tel. +49 (0) 7157 125 100, Fax +49 (0) 7157 125 120, E-Mail: info@telegaertner.com

1 GHz	
Return loss semi-rigid cable (angle style) at 2 GHz	≥ 25.2 dB
Return loss semi-rigid cable (angle style) at 4 GHz	≥ 24.2 dB
Return loss semi-rigid cable (angle style) at 6 GHz	≥ 23.2 dB

Standards	
IEC 60 169-15	

© 2016 Telegärtner Karl Gärtner GmbH. Technische Änderungen vorbehalten. Technical changes reserved. www.telegaertner.com
Lerchenstr. 35, D-71144 Steinenbronn, Tel. +49 (0) 7157 125 100, Fax +49 (0) 7157 125 120, E-Mail: info@telegaertner.com